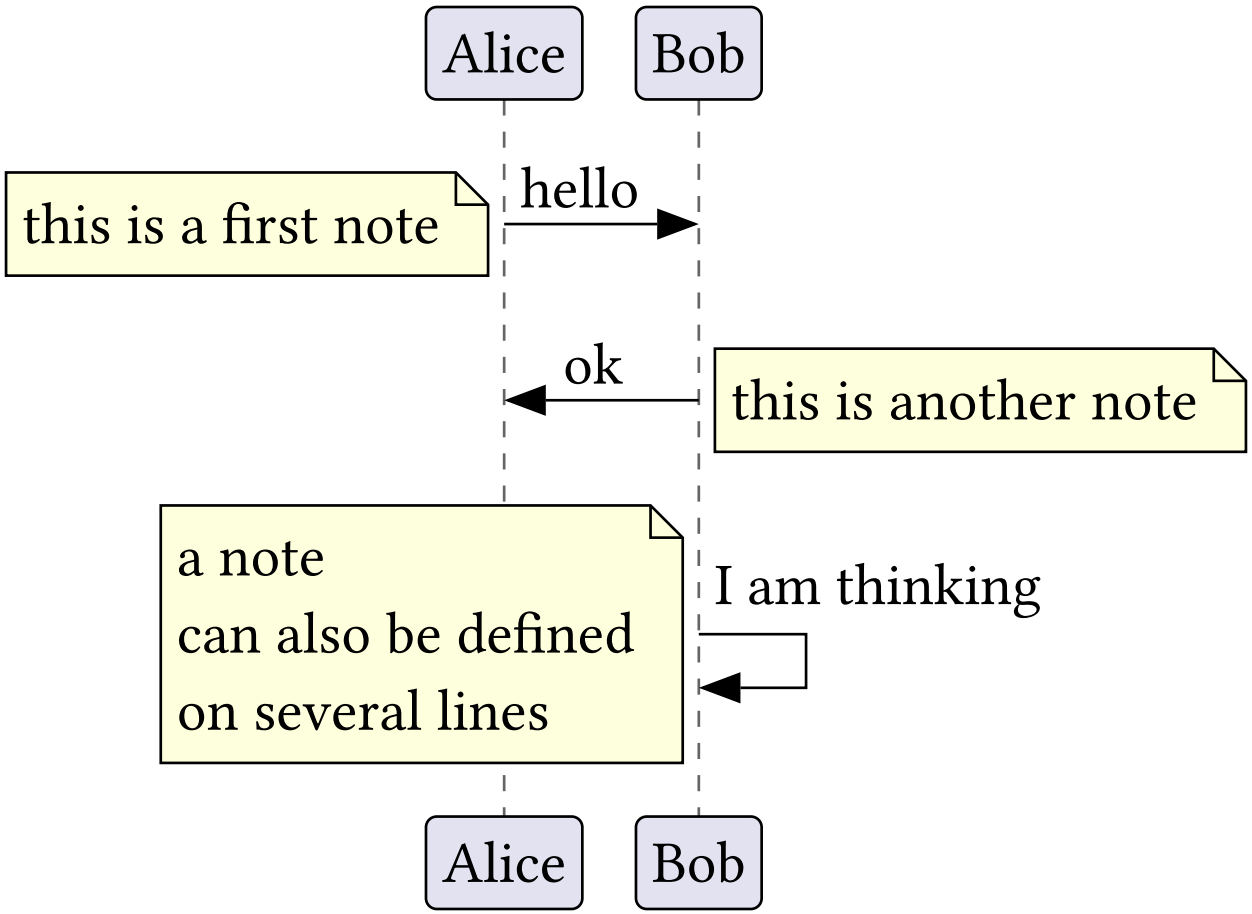
Alice
Bob
this is a first note
hello
ok
this is another note
a note
can also be defined
on several lines
I am thinking
Alice
Bob

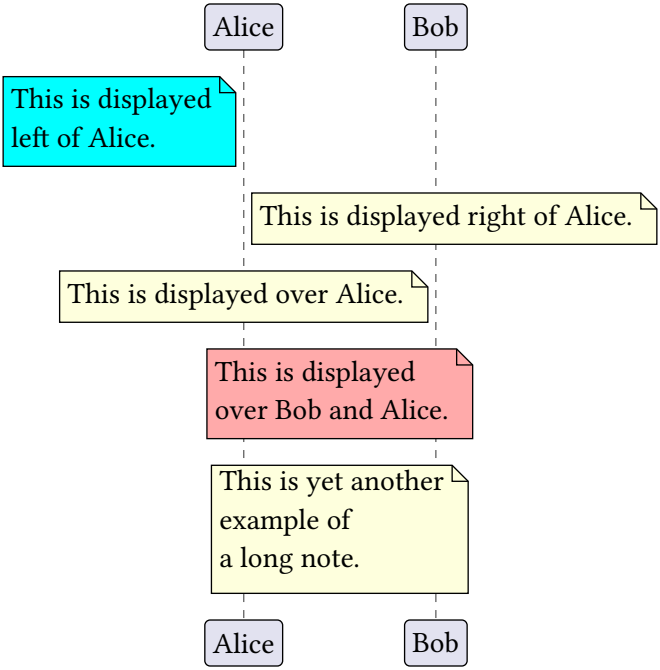
Alice
Bob
This is displayed left of Alice.
This is displayed right of Alice.
This is displayed over Alice.
This is displayed over Bob and Alice.
This is yet another example of a long note.
Alice
Bob

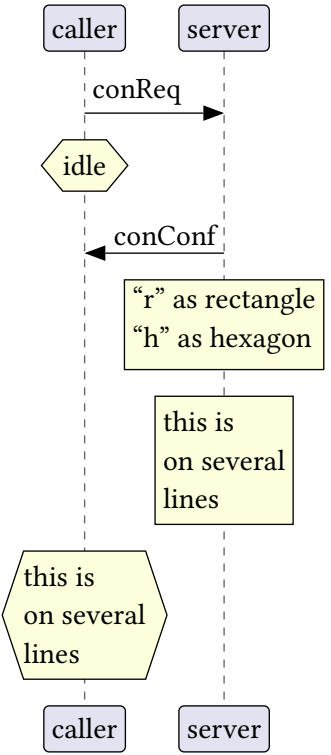
caller
server
conReq
idle
conConf
“r” as rectangle
“h” as hexagon
this is
on several
lines
this is
on several
lines
caller
server

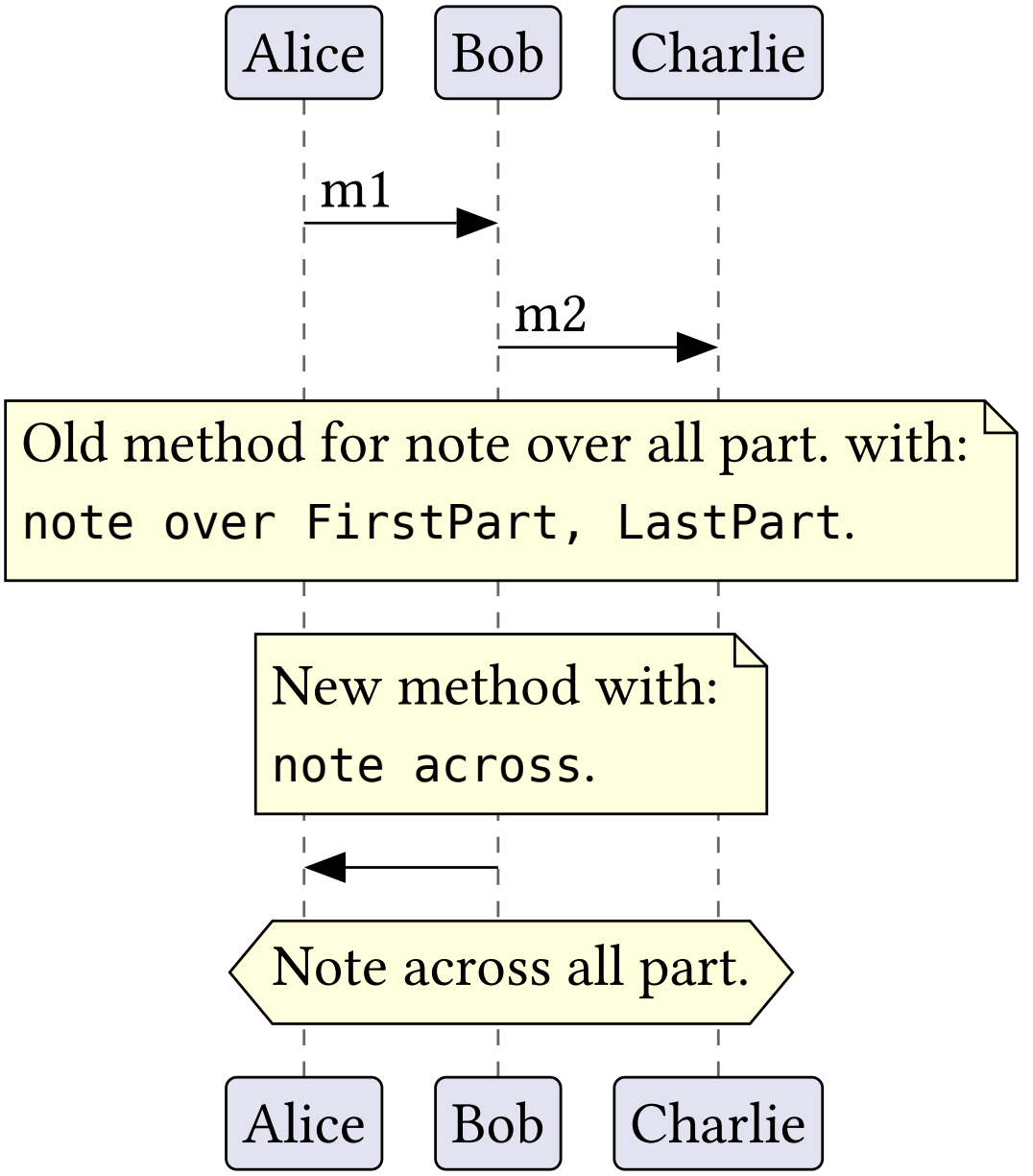
Alice
Bob
Charlie
m1
m2
Old method for note over all part. with:
note over FirstPart, LastPart.
New method with:
note across.
Note across all part.
Alice
Bob
Charlie

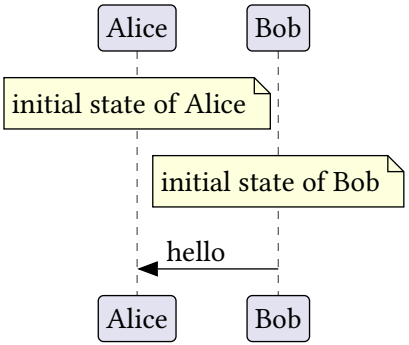
Alice
Bob
initial state of Alice
initial state of Bob
hello
Alice
Bob

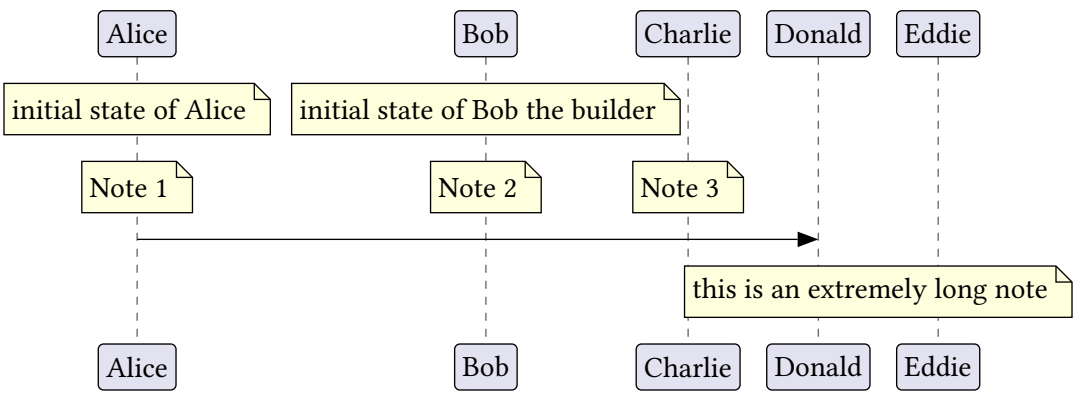
Alice
Bob
Charlie
Donald
Eddie
initial state of Alice
initial state of Bob the builder
Note 1
Note 2
Note 3
this is an extremely long note
Alice
Bob
Charlie
Donald
Eddie

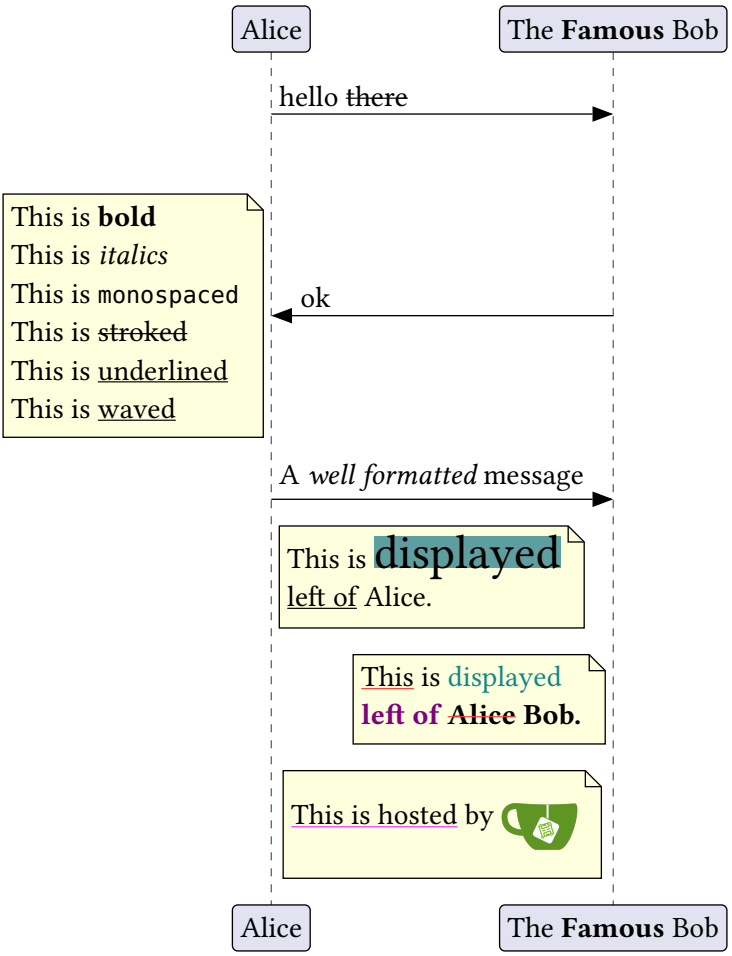
Alice
The Famous Bob
hello there
This is bold
This is italics
This is monospaced
This is stroked
This is underlined
This is waved
ok
A well formatted message
This is displayed
left of Alice.
This is displayed
left of Alice Bob.
This is hosted by
Alice
The Famous Bob

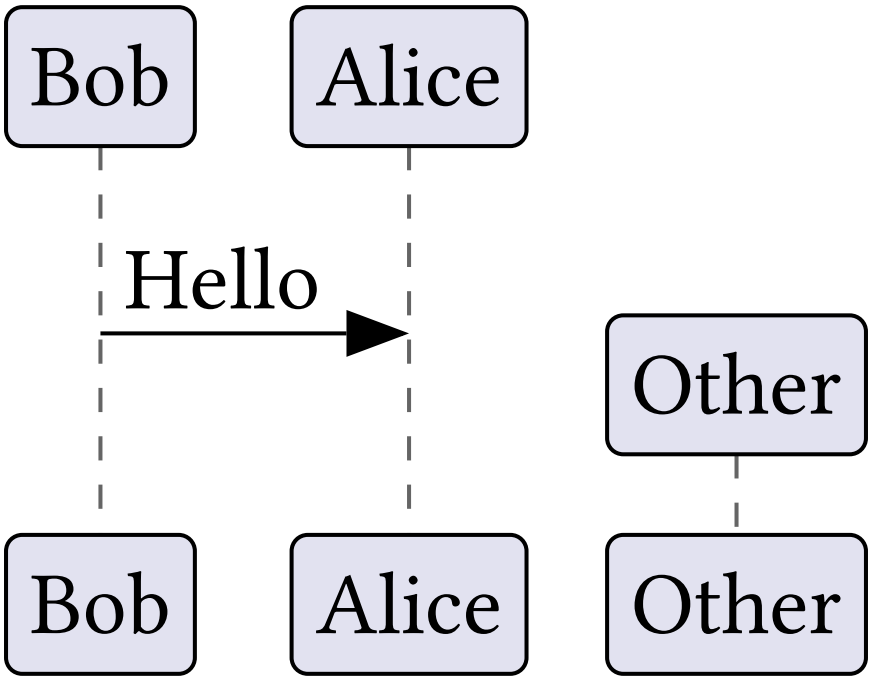
Bob
Alice
Hello
Other
Bob
Alice
Other