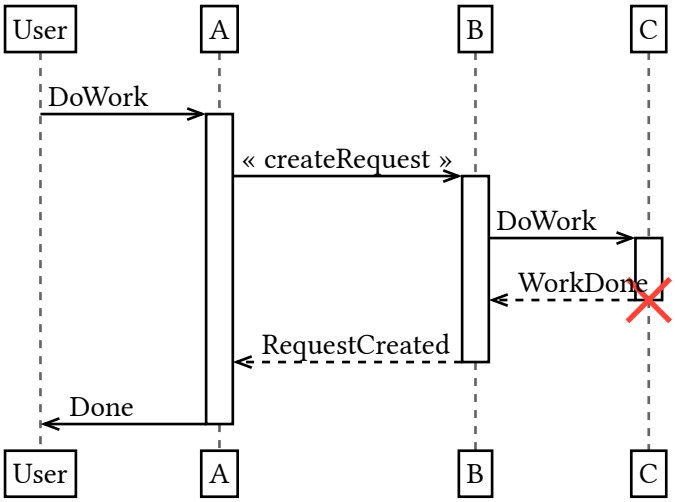
User
A
B
C
DoWork
« createRequest »
DoWork
WorkDone
RequestCreated
Done
User
A
B
C

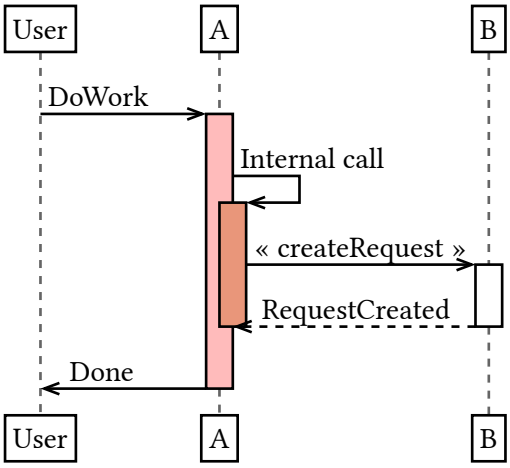
User
A
B
DoWork
Internal call
« createRequest »
RequestCreated
Done
User
A
B

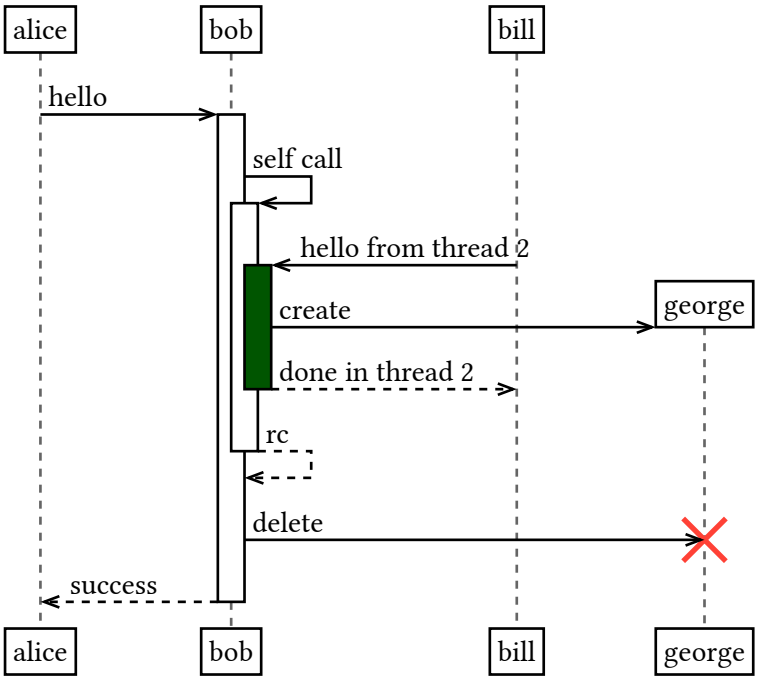
alice
bob
bill
hello
self call
hello from thread 2
create
george
done in thread 2
rc
delete
success
alice
bob
bill
george

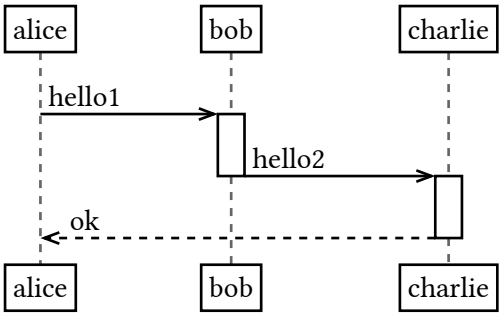
alice
bob
charlie
hello1
hello2
ok
alice
bob
charlie

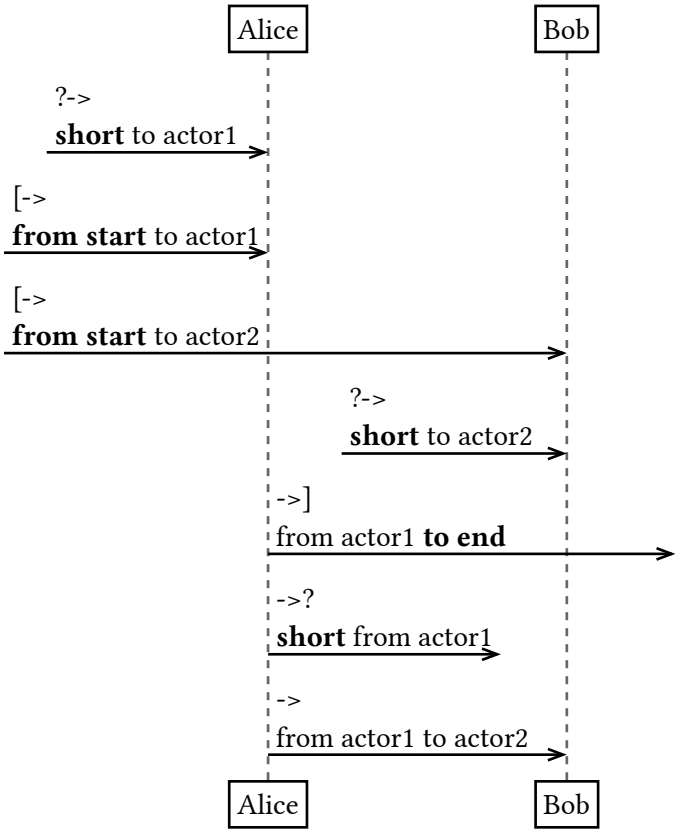
Alice
Bob
?->
short to actor1
[->
from start to actor1
[->
from start to actor2
?->
short to actor2
->]
from actor1 to end
->?
short from actor1
->
from actor1 to actor2
Alice
Bob