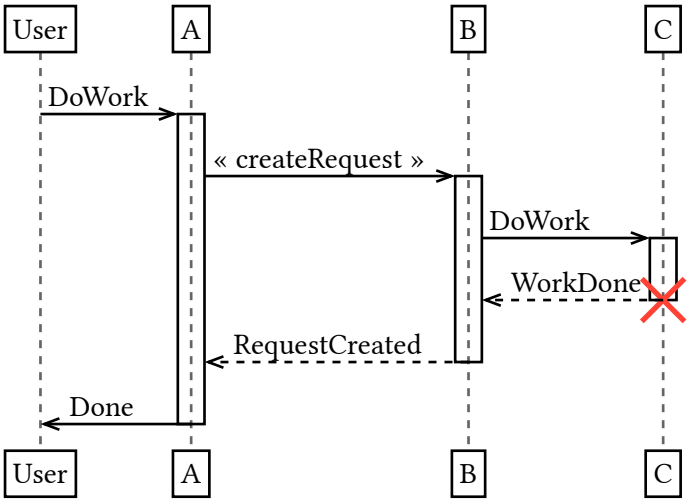
User
A
B
C
DoWork
« createRequest »
DoWork
WorkDone
RequestCreated
Done
User
A
B
C

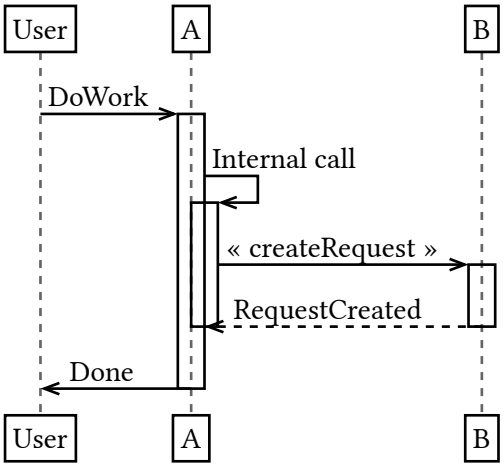
User
A
B
DoWork
Internal call
« createRequest »
RequestCreated
Done
User
A
B

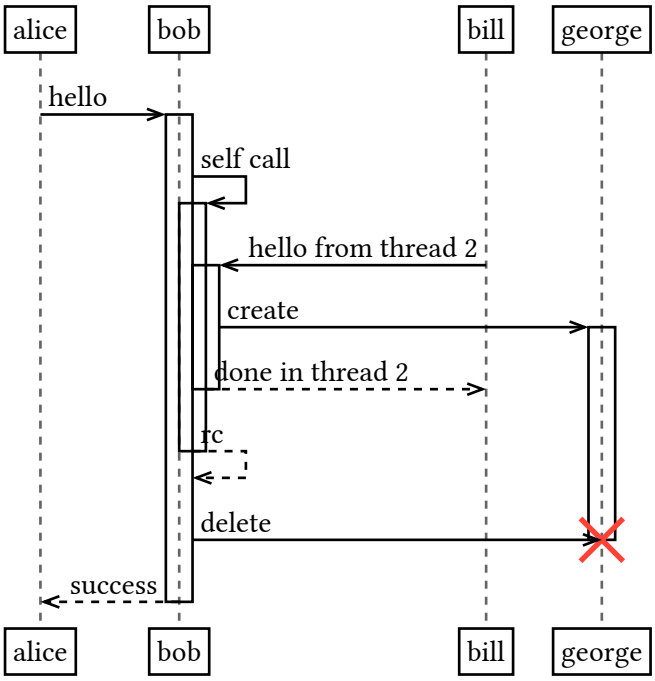
alice
bob
bill
george
hello
self call
hello from thread 2
create
done in thread 2
rc
delete
success
alice
bob
bill
george

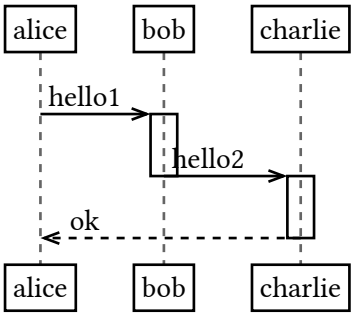
alice
bob
charlie
hello1
hello2
ok
alice
bob
charlie