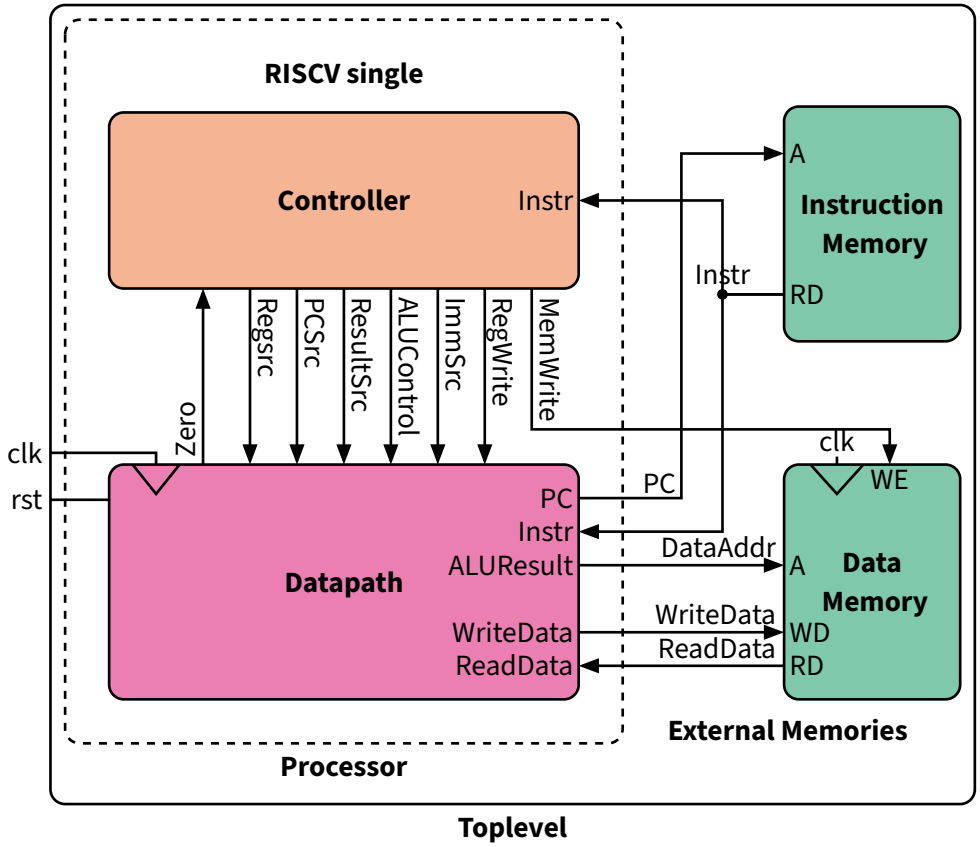
RISCV single
Controller
Instr
Instruction Memory
A
RD
Instr
Regsrc
PCSrc
ResultSrc
ALUControl
ImmSrc
RegWrite
MemWrite
Zero
clk
rst
clk
WE
PC
Instr
ALUResult
Datapath
WriteData
ReadData
PC
DataAddr
A
Data Memory
WriteData
WD
ReadData
RD
External Memories
Processor
Toplevel